CE

TRM
DIGITAL ELECTRONIC PANEL METER

TECHNICAL DATA

MECHANICAL DATA	
Housing	Self-extinguishing plastic, UL 94 V0
Dimensions	48x48 mm (1/16 DIN) – depth 107 mm
Weight	250 g approx.
Connections	6,3 mm Faston terminals
Mounting	Flush in panel in 45,5x45,5 mm hole
Front panel protection	IP 54 mounted in panel with gasket
ELECTRICAL DATA	
Power supply	24 VDC, 24, 110, 230 VAC +/-10%
AC Frequency	50 / 60 Hz
Power consumption	3 VA approx.
INPUT DATA	
Thermocouple	J, K, S – According to IEC 584-2 accuracy class 1 or 2
Thermoresistance	Pt 100 IEC – According to IEC 751 accuracy class A or B
Current input for normalised signals	0/4...20 mA
Current input	For AC and DC currents, 2A max.
Voltage input	For 500 VDC tensions, 300 VAC max.
FUNCTIONAL DATA	
Overall accuracy	According to the input type
Max. Input frequency	For frequency or RPM input 500 Hz. max.
Display resolution	According to the model and to the used probe 1/0,1
Measurement range	According to the used probe. Display visualisation – 1999 … 1999 max.
Unit of measurement	According to the input signal
Operating temperature	0…55°C
Operating humidity	30…95 RH% without condensation

FUNCTIONING

The signal coming from a sensor is properly amplified through an input module. This signal is sent to the input of an A/D converter which transforms it from analogue to digital. The signal is then displaied through a led display. The values of zero and of the end of scale are modifiable by means of external trimmers.

MECHANICAL DIMENSIONS (mm)

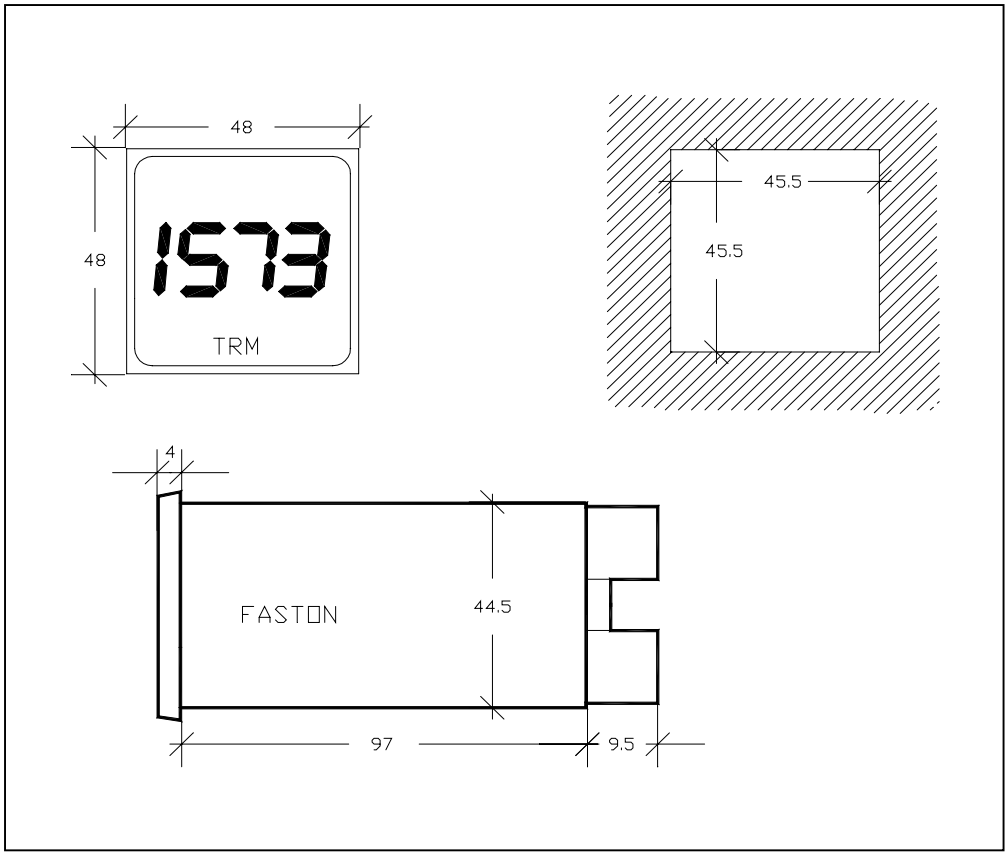

CONNECTIONS DIAGRAM

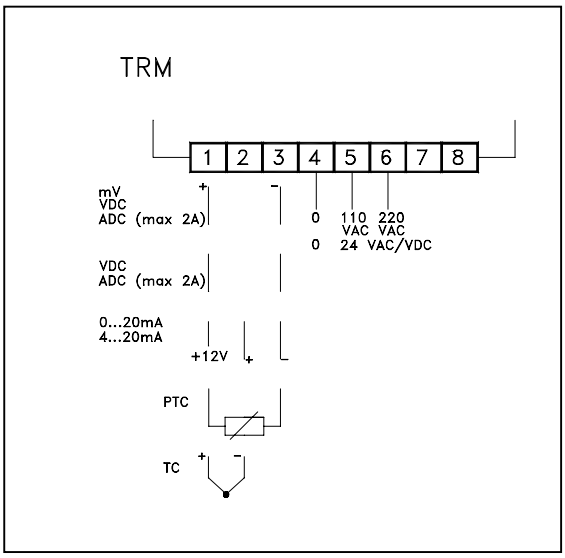

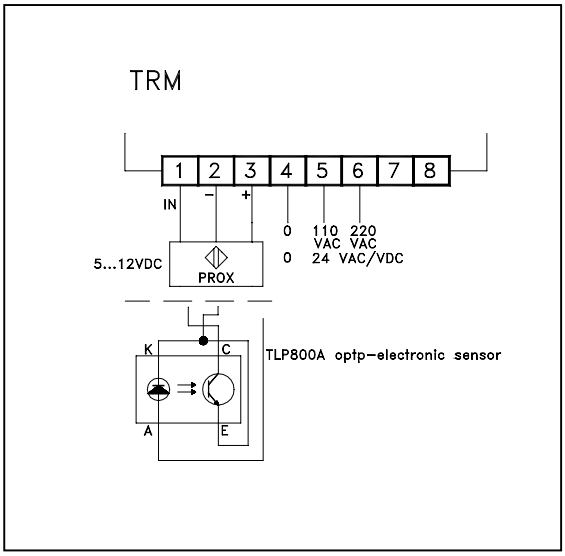

CERTIFICATIONS AND CONFORMITY

▲ CE Conformity: CEE EMC 89/36 (EN 50081-1, EN 50082-1)
CEE LT 73/23 and 93/68 (EN 61010-1)